bbJconn Since 1987 步步精科技

REV.	ECN NO	CONTENT	DATE	ENGINEER
A0				

使用温度范围 (Ambient temperature Range):-25° ~+85°
适用线规 (Applicable Wires):AWG 28#~22#
适用基板厚度 Applicable PCboard thickness):1.6mm
额定电压 (Voltage rating):250V AC,DC
额定电流 (Current rating):3A
接触电阻 Contact Resistance): ≤0.02Ω
绝缘电阻 (Insulation Resistance): ≥1000MΩ
耐压 (Withstand Voltange):1000V/min
材料 (Material)
1.基座：PA66 FV2
2.插针： 黄铜

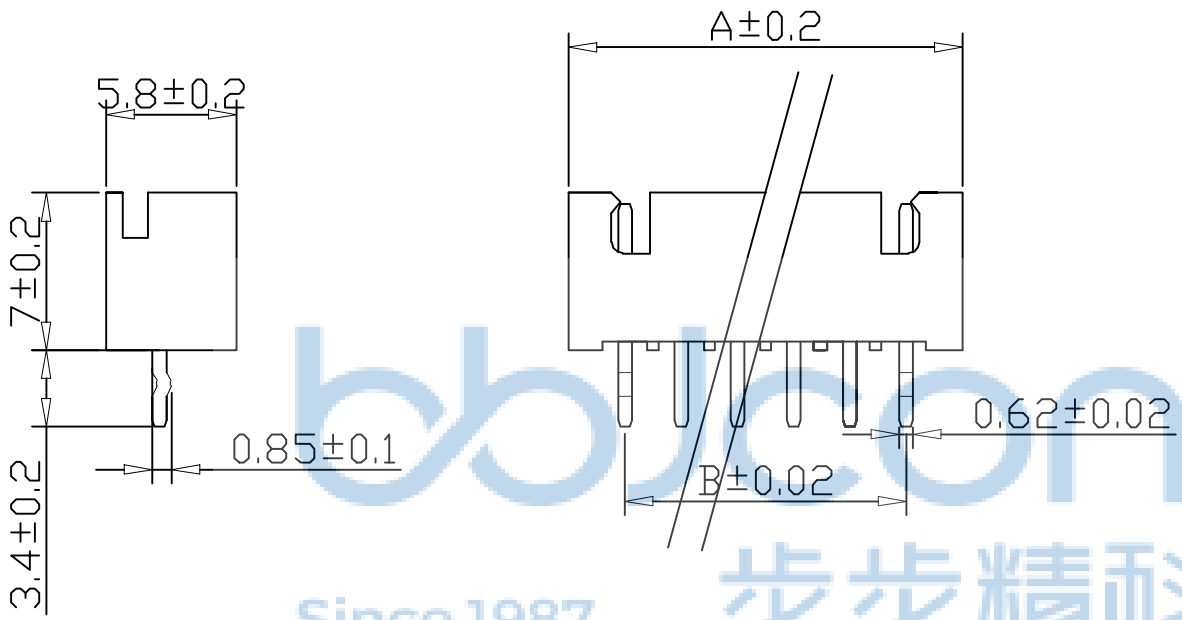

孔位	A	B
2	7.5	2.5
3	10	5.0
4	12.5	7.5
5	15.0	10.0
6	17.5	12.5
7	20.0	15.0
8	22.5	17.5
9	25.0	20.0
10	27.5	22.5
11	30.0	25.0
12	32.5	27.5
13	35.0	30.0
14	37.5	32.5
15	40.0	35.0

THIS DOCUMENT IS THE SOLE PROPERTY OF BBJconn Technology Co.,Ltd. Corporation AND SHOULD NOT BE USED IN WHOLE OR IN PART WITHOUT PRIOR WRITTEN PERMISSION.

深圳市步步精科技有限公司

.X: ±0.38 X°: ±3°
.XX: ±0.25 .X°: ±2°
.XXX: ±0.13 .XX°: ±1°

NAME: XH-4A (2.54-4P) 直针 打K脚 白色

APPD.	JM_Zheng	PJ. NO.: WT.02.11-31-1003	
CHKD.	LYX	SIZE: A4	DRW NO.:
DR.	SGF	FINISH: SEE NOTES	MAT'L.: SEE NOTES
PDWG,NO: 0102-1		SCALE: N/A REV.: A0	UNIT: mm PAGE: 1/2

REV.	ECN NO	CONTENT	DATE	ENGINEER
A0				

PE袋规格:***X***(以实际出货为准)

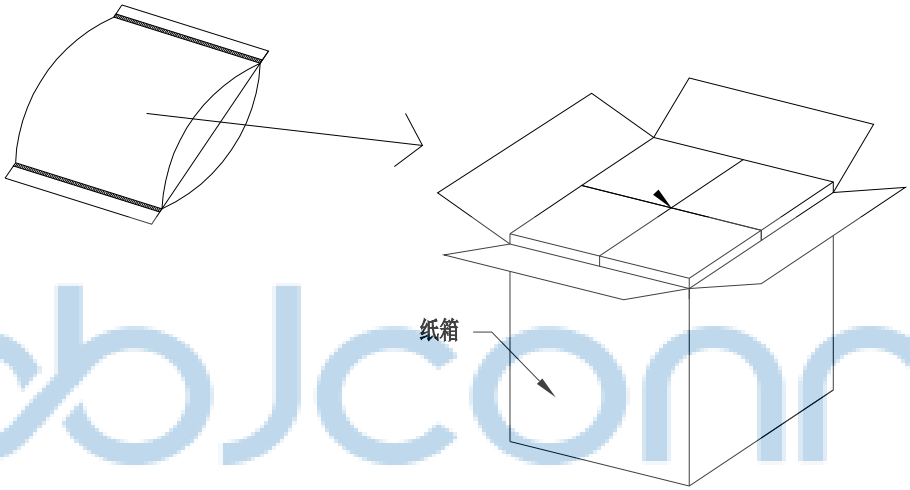

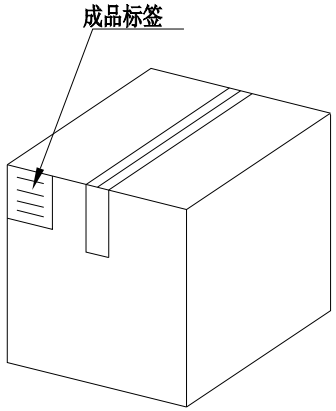

1.包装要求:

1.1 每PE袋包装2000pcs;

1.2 每1袋放一小纸盒;

1.3 每20个小纸盒放一个纸箱，共计40000PCS

1.4 纸箱外贴上标签

THIS DOCUMENT IS THE SOLE PROPERTY OF BBJconn Technology Co.,Ltd. Corporation AND SHOULD NOT BE USED IN WHOLE OR IN PART WITHOUT PRIOR WRITTEN PERMISSION.

深圳市步步精科技有限公司

.X: ±0.38 .XX: ±0.25 .XXX: ±0.13	X°: ±3° .X°: ±2° .XX°: ±1°	NAME: XH-4A (2.54-4P) 直针 打K脚 白色
APPD.	JM_Zheng	PJ. NO.: WT.02.11-31-1003
CHKD.	LYX	SIZE: A4 DRW NO.:
DR.	SGF	FINISH: SEE NOTES MAT'L.: SEE NOTES
PDWG,NO: 0102-1		SCALE: N/A REV.: A0 UNIT: mm PAGE: 2/2